SoundCertificate

30 May 2017

Chromecast built-in for Audio Multi-room Certification Test Specification Version 4.3

Changelog

30 May 2017 - Version 4.3	• Updated Audacity version • Added information about accuracy of specific volume levels • Added priority of output connectors • Added filenames for the special audio files in use • Further changes from GC to CCBI • Added action in GCERT-2 step 4 to ensure that a group of three devices is tested • More precision about when to get RSSI in GCERT-5 • Added information in the section about explicit leader/follower configuration
15 March 2017 - Version 4.1	• Changed expected behavior in GCERT-21 according to Google • Minor wording changes
1 March 2017 - Version 4.0	• Validation information added • GC4A changed to CCBI4A • Specify sample rate of 44.1 kHz or 48 kHz for audio recording; Only for GCERT-6 8 kHz is specified. Also defined storage time for recorded files • Removed testing with USB2Ethernet adapters • Removed “partner app” from preconditions where it is not necessary • Clarify step 7 in GCERT-2, see note there • Specify repeating of GCERT-5 for different family members

Apollo SoundCertificateGmbH
High Tech Campus Vienna, Gutheil-SchoderGasse 8, 1100 Vienna, Austria
E-mail: welcome@soundcertificate.com
Web: www.soundcertificate.com

	• In GCERT-7, maximum sync among all members of a multi-room group should be within ±1 ms, within ±5 ms is accepted with notes • In GCERT-9, the 2.4 GHz band is defined for testing • Removed “Scrubbing” from step 4 and step 5 in GCERT-17 • Minor correction in GCERT-31, step 2 • Adding mute/un-mute commands in Volume control through multizone_cli • Removed “passed with notes” result for the case that volume level can be changed step by step only since this is restriction of Google
08 November 2016 - Version 3.0	• Defined tolerated deviation for expected volume level (max. 0.01 absolute value) • In GCERT-5: RF Performance the RSSI is no pass/fail criteria any more • Due to latest announced CDD casting messages (such as play, pause etc.) have to be completed on group with a maximum latency of 200 ms between applying to the first and to the last device in a clean environment. This restriction has become part of performance test cases GCERT-8 and GCERT-9. If other test cases (which are not executed in clean environment) can not meet this limit they will not fail but pass with notes. • Added defined restriction that casting messages (such as play, pause) shall not cause any distortions audible or visible in the recording software • Reviewed Test Suite Power management and added test case GCERT-31 • Google Cast app changed to Google Home app
06 October 2016 - Version 2.3	• Additional TC numbers to be consistent with TestLink Reports In further conversations this numbers shall be mentioned only to avoid misunderstandings • Added more detailed information about the group volume level

	• Added an adequate initial volume level in step 2 of GCERT-8 and GCERT-9 • Added time limit for command execution in step 4 of GCERT-8 and GCERT-9 • Defined default settings for routers in use • Added result “passed with notes”. Please find further information below Definitions
18 July 2016 - Version 2.0	• Simplified the test plan and removed test cases
05 July 2016 - Version 1.3	• Added further requirements, definitions and information • Added diagram for test bed 2.3 • More detailed and more consistent explanations in all preconditions • Changed special audio files for performance tests • Revised TC 3.2.1: changed value for attenuation • Revised TC 3.2.1: changed soundcard to common soundcard • Revised TC 3.2.4 and TC 3.2.5: defined audio source • Revised TC 3.3.1 for case that DUT is not elected as leader automatically • Revised TC 3.5.1: removed next/prev from RC and HW buttons. • Defined concrete router for performance test suite only
23 March 2016 - Version 1.0	• Added diagram for common test environment • More detailed description of some test cases • Added more detailed volume control tests, TC 3.5.3. and TC 3.5.4 • Added information about the volume control
18 March 2016 - Version 0.98	• Defined Audacity as general audio recording software • Defined content apps in use • Revised TC 3.1.3 • Revised TC 3.6.4 E.g. test re-enabling network interface during playback

15 March 2016 - Version 0.96	• Added further requirements • Revised TC 3.1.1
13 March 2016 - Version 0.95	• Added further requirements, definitions and information • Common group configuration: 1 DUT connected via Ethernet is leader 1 DUT connected wirelessly is follower 1 Chromecast Audio connected wireless is follower • Removed obsolete test cases • Added checking playback behavior in TC 3.1.4 • Added values for performance test suite: RSSI, SNR, CPU and memory load • Added testing different audio processing modes in TC 3.3.3 • Added testing unmute behavior by increasing the volume level in TC 3.5.2 • Additional test suite: 3.6 Power management

Table of Contents

Chromecast built-in for Audio
Multi-room Certification Test Specification Version 4.3
- Changelog
- Table of Contents
- Introduction
  - Validity period
  - Definitions
  - Requirements from OEM
- Test environment
  - Common test bed
  - Test bed for the RF performance test
  - Test bed for the duration test and synchronization measurement test
- Test Plan
  - Basic functionality
  - Performance
  - Source switching
  - User interaction
  - Power management
- Manual configuration of Multi-room
  - Explicit leader/follower configuration
  - Get information about automatically elected leader and group port
  - Volume control through multizone_cli

1.Introduction

This document specifies how SoundCertificate tests the Multi-room functionality of CCBI4A enabled devices within the CCBI4A Multi-room certification process.

*1.1.*Validity period

This test plan is valid after it is uploaded in Google's Portal until a new version is released at the same place.

Note: If a test case is failed it is checked if it would have been passed with a specification that was valid for the last 2 months. Due date is the day when the certification test run started.
Would it have passed with an actual outdated test plan, it “passes with notes” in the currently valid plan. Please find further information below Definitions.
This ensures both testing against Google’s latest requirements and also granting OEM time to adapt the changes in the firmware.

*1.2.*Definitions

1.2.1. Terminology

CCBI4A: Chromecast built-in for Audio; Google’s technology for streaming audio from mobile devices and from Chrome Browser to supported audio streaming clients (network players).
Chromecast Audio: The latest Google Chromecast Audio device with the latest software.
Google Home app: Latest version of Google’s official app for setting up Chromecast/ChromecastAudio and CCBI4A enabled devices and creating CCBI4A Groups.
CCBI4A Group: Several CCBI4A enabled devices logically grouped via the Google Home app to play the same audio content simultaneously and in sync (CCBI4A Multi-room playback).
Playing in sync: Synchronous CCBI4A Multi-room playback of the same audio content on several devices. Ideally all devices in a group are playing within ±2 ms. Within ±20 ms is acceptable.
Except of specific test cases the synchronization is measured only in case of doubt, i.e. if differences are audible or visible in the audio recording software.
OEM: Original equipment manufacturer.
DUT: Device under test; OEM device.
OEM Multi-room group: Several DUTs (OEM devices) grouped within the OEM Multi-room solution.
Partner app: The mobile app (iOS or Android app) dedicated to control the DUT.
Content app: Apps of audio content or audio service providers.

1.2.2. Further information

Group casting: One device is automatically elected as the group leader (amongst others based on network quality) and receives a data stream from the audio source. The other group members are followers and receive the audio stream from the leader and only render the audio stream. End-users do not get any information about the election process or which device is the group leader.
For some tests it is necessary to know which device is the group leader and which are followers. And for some test cases explicit leader/follower configuration is needed. Information about how to handle this can be found below in Manual configuration of Multi-room.

Group volume level: Volume levels are represented by a value between 0 (minimum volume level) and 1 (maximum volume level). The group volume level is a single volume scale representing the group. It is the scale which is modified by the audio source in an active cast session, e.g. the content app. The group volume level is always the average of each member's logical volume level. If the group volume is changed, the logical volume of each device is changed, but logical volumes can go > 1.0. This allows the group volume to go up to 1.0 smoothly. The reported volume levels for any device (and the volume levels that are actually set) are never higher than 1.0. If the group volume level would go above 1.0 due to a member's volume level change (i.e., if the group volume level is already at 100% due to previous changes, and then one of the member's volume level is increased), then the logical volume level of any other members that are above 1.0 will be reduced to make the average 1.0 again.
For some test cases it is necessary to set the volume levels to a specific value. Information about how to handle this can be found below in Volume control through multizone_cli.

Special audio files: For some test cases special files are required, i.e. single files playing continuous audio for several hours.
SoundCertificate has created following files:

- noise300ms_sine500Hz_48kHz_20min.mp3
  A file consisting of one sine period (500 Hz) followed by 300 ms of pink noise, repeating for 20 minutes (created for test case 3.2.1. RF performance).
- noise10hours.mp3
  A file consisting of 10 hours of pink noise (created for test case 3.2.2. Duration test).
- noise300ms_sine500Hz_48kHz_180min.mp3
  A file consisting of one sine period (500 Hz) followed by 300 ms of pink noise, repeating for 3 hours (created for test case 3.2.3. Audio output synchronization).

These 3 files can be found in Google Drive: SoundCertificate Special Audio Files.

Failed test cases:
SoundCertificate is anxious to pinpoint the source of the problem.
If a failure could be caused by the test environment the test is repeated using Chromecast Audio devices, and in case of failing again faulty parts of the environment, e.g. router, will be replaced.
If a failure could be caused by a device specific hardware problem the test is repeated using another DUT.
If a failure is caused by the software of the DUT the respective test case is marked as failed and detailed information about what happened including logs of all involved devices are provided to the OEM.

Passed with notes:
In addition to "Passed" and "Failed" there exists the result "Passed with notes". This means that the DUT passed the test case but the OEM is recommended to do further improvements.
DUT will "pass with notes" in following situations:

- If harmless distortions occur on the DUT which are only visible in the recording software but not audible.
- GCERT-5: RF performance: If RSSI is below -75 dB but there are no dropouts on the follower devices.
- GCERT-6: Duration test: If there is a maximum of 3 dropouts and the total length of all together is less than 100 ms in 10 hours of playback.
- GCERT-7: Audio output synchronization: If maximum sync among members of the group is not within ±1 ms but within ±5 ms.
- When issuing casting messages (play, pause, etc.) to a group the latency between grouped devices to apply the command is more than 200 ms.
  Be careful: In clean environment this is a fail criteria.

- If a test case is failed against current specification but would have passed a specification that is not outdated for more than 2 months, please find further information below Validity period.

Note: If a DUT "passes with notes" it is expected that the OEM will improve the behavior as early as possible. In Re-certification (which is needed for major Firmware Upgrades) devices will not pass respective test cases again if behavior has not been improved, i.e. issue has been fixed.

Accuracy of specific volume levels (for GCERT-19 and GCERT-20 in User interaction test suite):
The expected volume levels should be reached with accuracy of 1% (absolute value), i.e. if the expected volume level is 0.33, a value in the range of 0.32 to 0.34 is accepted.
To ensure the correct functionality the accuracy shall be less than 1 volume step, i.e. if the DUT has 50 volume steps between 0 (representing the minimum) and 1 (representing the maximum), one step will increase/decrease the volume by 2%, so the expected volume shall be reached more accurate than 2%.
All Chromecast built-in devices must have at least 15 volume steps (same as Android devices).

Priority of audio output connectors:
If a DUT has several possibilities to be connected to the soundcard, there is following priority:

1. RCA connector (Left channel)
2. 6,35 mm phone connector
3. 3,5 mm phone connector
4. Others (Hardware Re-work see below 1.3.Requirements from OEM, Optical output etc.) which require adapters before they can be connected to the soundcard input

For the tests in the shielded room phone connectors have highest priority since the M-Audio Delta 1010 soundcard has 6,35 mm input.

1.2.3. Hardware and Software

The following hardware and software is in use at SoundCertificate for the certification process.

Wireless router: Dual-band 802.11ac WLAN Router
In the common test environment wireless CCBI4A devices are connected to the 2.4 GHz band
Android device: Samsung Galaxy Tab running Android 5.0 or higher
iOS device: iPhone 6 Plus running iOS 9.2.1 or higher
Soundcard: Terratec DMX 6Fire USB

Audio recording software: Audacity v2.1.2 or higher
Sample rate: 44.1 kHz or 48 kHz (except from GCERT-6: Duration Test: 8 kHz)
Recorded files (only those from Performance test suite) will be stored locally for 1 month for the case that a review is necessary
Content apps: Google Play Music, Android mirroring from the Google Home app, TuneIn and Spotify (if available)
Local media server: MediaTomb

Specific hardware for critical test cases

For highest consistency in critical test cases, e.g. 3.2.Performance, specific hardware is in use.
The following hardware is defined and in use in a permanent set-up.

Wireless routers: Netgear AC1750 Smart WiFi Router (Model: R6400)
TP-Link Archer C2 AC750 Wireless Dual Band Gigabit Router
Linksys WRT1200AC Dual-Band Smart Wi-Fi Wireless Router

Settings are default for all routers.
Soundcard: M-Audio Delta 1010

Specific hardware is listed in the respective test case.

1.3. Requirements from OEM

Following requirements are needed and shall be provided by the OEM to enable the certification process.

1.3.1. Required information

Please find a complete list of required information in the application sheet.

1.3.2. Required hardware

DUTs:
A minimum of 3 devices per product family is required. For a product family with different variants at least one device of each variation, i.e. per different DSP or DSP software configuration, is needed.

Line or headphone out:
When product has line output, filter is not required.
Products that do not offer access to an analog audio signal shall be prepared according to the following guidelines.
Solder cables in parallel to the L+R speakers which reproduce 500 Hz.
Since audio amplifier output is always a differential signal and our soundcard does not have a differential input (and also would get damaged when directly feeding output of a powerful amplifier into the soundcard input), a differential filter (actually a differential to single ended converter plus attenuator) is then used to attenuate the class-D modulation, producing a proper analog audio signal to feed into the sound recording equipment.

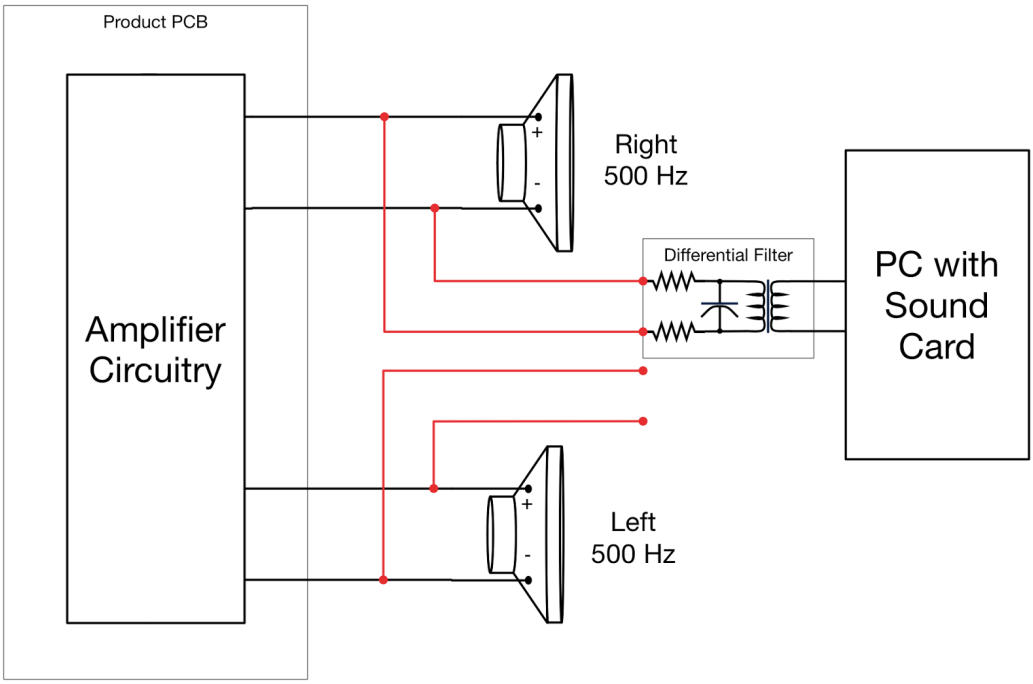

There is no special requirement on the wire.
There is no connector required on the wire.

Please find schematic of the differential filter in the latest faq document.

2.Test environment

The following test beds describe how the devices are organized and linked together.

*2.1.*Common test bed

This test bed is specified for most of the test cases.

- A wireless router is connected to the Internet
  In the common environment wireless CCBI4A devices are connected to the 2.4 GHz band
- 2 DUTs and 1 Chromecast Audio
  1 DUT is connected to the router via Ethernet (Device_A)
  1 DUT is connected to the router wirelessly (Device_B)
  1 Chromecast Audio is connected to the router wirelessly (Device_C)
- A PC is connected to the router via Ethernet
- The devices are connected to a soundcard
- The soundcard is connected to the PC

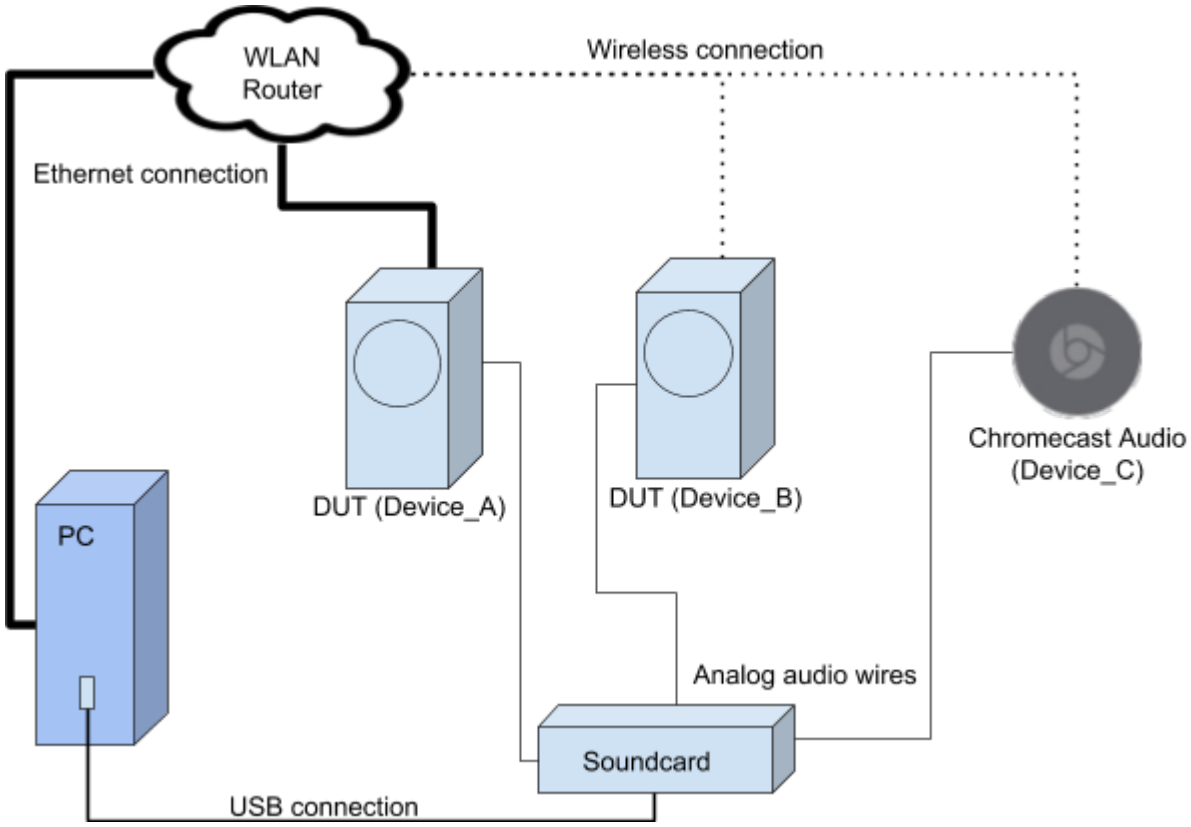

For product families with >3 variations we will randomly swap devices during the certification process, e.g. use family member 1 and member 2 in couple of test cases and then continue using member 3 and member 4.

If the DUT does not support Ethernet, it is connected to the 5 GHz band.
If the DUT does not support the 5 GHz band, it is connected in the 2.4 GHz band.

If it is required that devices are grouped and a DUT is leader but is not elected automatically, please find information how to configure a DUT explicitly as group leader below Explicit leader/follower configuration.

2.2. Test bed for the RF performance test

This test bed is specified for TC 3.2.1. RF performance

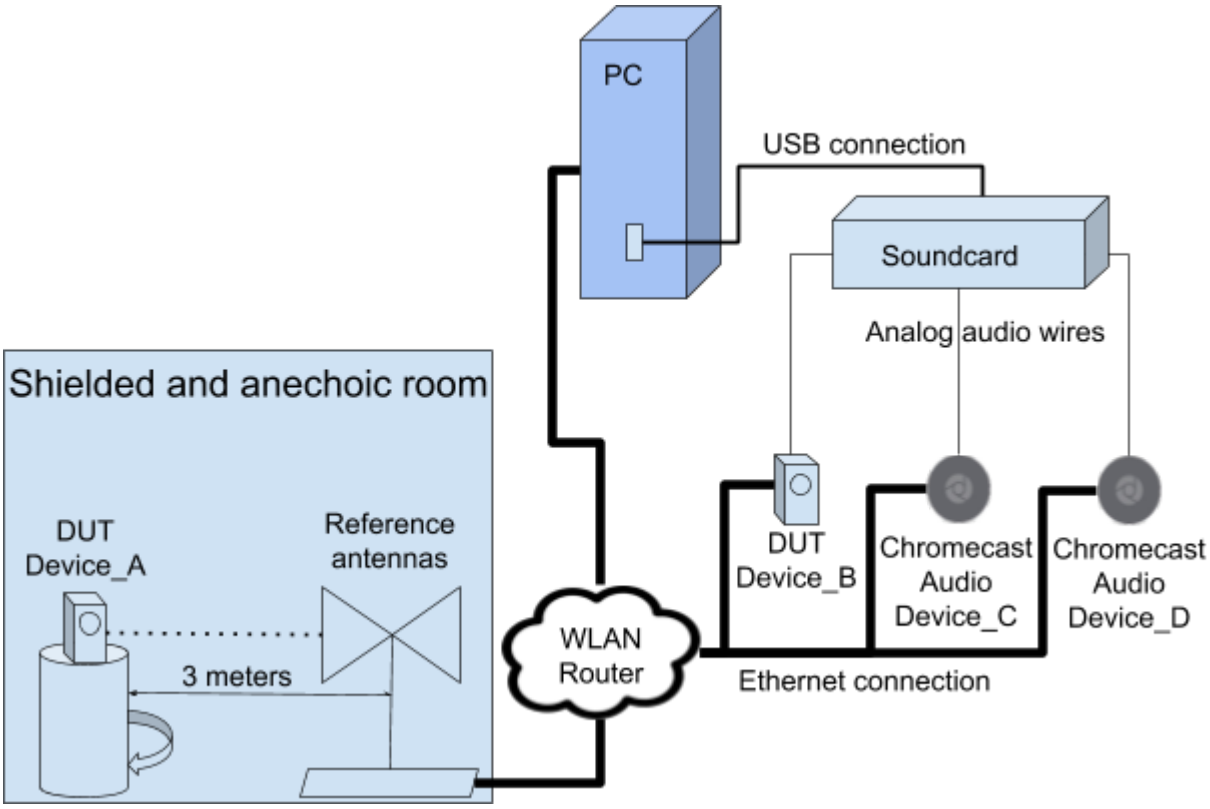

Starting position of DUT in the shielded and anechoic room (Device_A) is with the front facing directly towards the antennas.
If DUT does not have an obvious front, a reference point on the product is picked and noted in the test report.

If the DUT does not support Ethernet, the follower DUTs are connected to an additional access point wirelessly in the 5 GHz band.
If the DUTs do not support the 5 GHz band, they are connected in the 2.4 GHz band.
The access point is connected to the router via Ethernet.
Access point: TP-Link Archer C2 AC750 Wireless Dual Band Gigabit Router.

2.3. Test bed for the duration test and synchronization measurement test

This test bed is specified for TC 3.2.2. Duration test and TC 3.2.3. Synchronization measurement test.

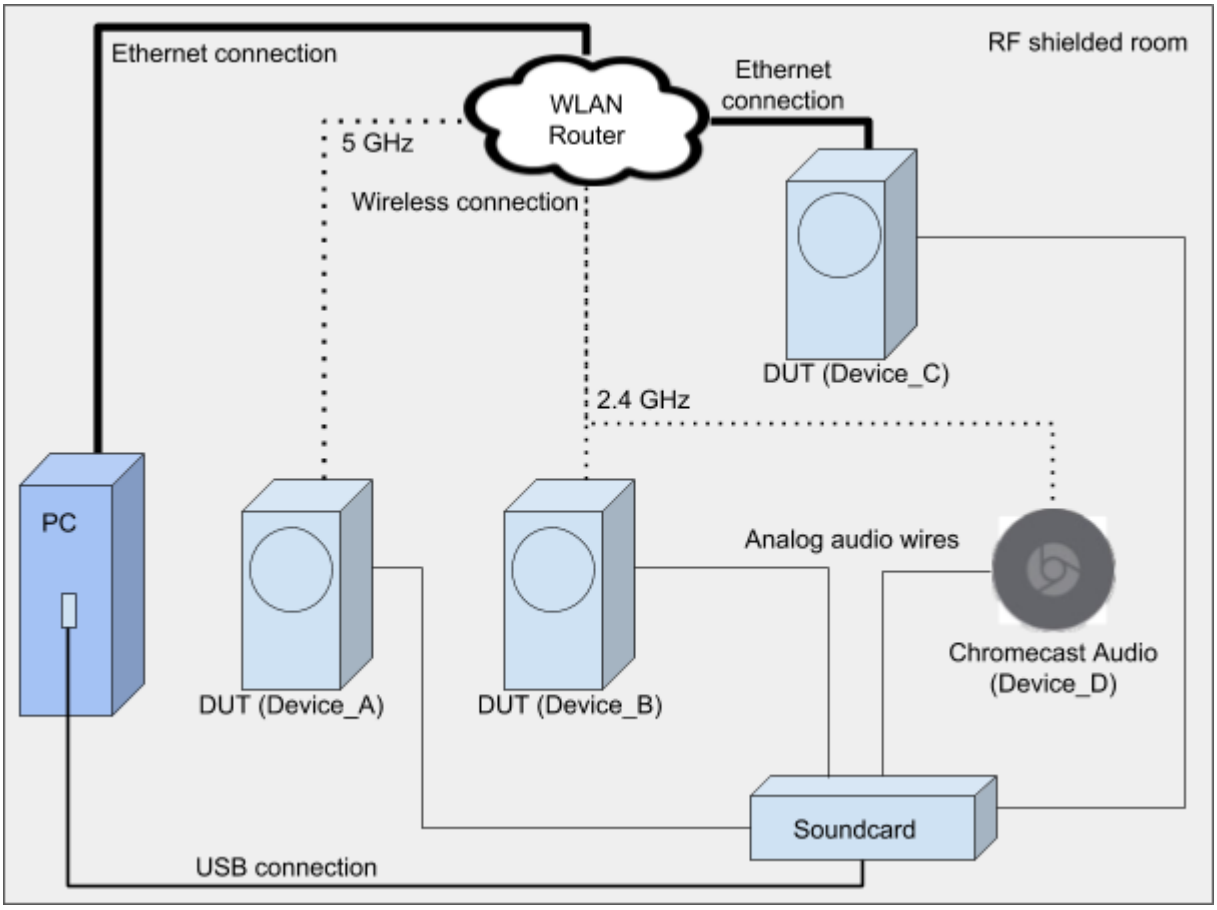

If the DUT does not support Ethernet, Device_C is connected wirelessly in the 5 GHz band.
If the DUT does not support the 5 GHz band, Device_A (and in case of Ethernet is not supported Device_C too) is connected in the 2.4 GHz band.
If the DUTs support neither Ethernet nor 5 GHz band, all devices are connected wirelessly in the 2.4 GHz band.

3.Test Plan

3.1. Basic functionality

Details: This test suite covers basic functionality tests: Group configuration and discovery, impact of any proprietary Multi-room solution, group casting.

GCERT-1: Configuration

Summary: This test case checks if CCBI4A Groups can be created, edited and deleted in the intended manner.
Preconditions: • A wireless router is connected to the Internet • 2 DUTs and 1 Chromecast Audio 1 DUT is connected to the router via Ethernet (Device_A) 1 DUT is connected to the router wirelessly (Device_B) 1 Chromecast Audio is connected to the router wirelessly (Device_C) The devices are not member of any group • An Android/iOS device with the Google Home app and content app The Android/iOS device is connected to the router wirelessly

#	Step actions	Expected results
1	Open the Google Home app. Create a CCBI4A Group (Group_1) including 1 DUT (Device_A) and 1 Chromecast Audio (Device_C). Create a second CCBI4A Group (Group_2) including both DUTs (Device_A and Device_B).	2 CCBI4A Groups are created. Both groups are visible in the Google Home app. All 3 devices (2 DUTs and 1 Chromecast Audio) are visible in the Google Home app.
2	Open a content app.	Both groups are available in the device picker of the content app. All 3 devices are available as standalone devices.
3	Delete both groups in the Google Home app.	Both groups are deleted. Groups are no longer visible in the Google Home app. In the device picker of the content app groups might be visible for some time but it is not possible to cast anything to the groups.

GCERT-2: Configuration for DUTs with OEM proprietary Multi-room solution

Summary: This test case checks if the OEM proprietary Multi-room solution and CCBI4A Multi-room work concurrently in proper manner. This test case is only required if the DUT has an OEM Multi-room solution.
Preconditions: • A wireless router is connected to the Internet • 2 DUTs and 1 Chromecast Audio 1 DUT is connected to the router via Ethernet (Device_A) 1 DUT is connected to the router wirelessly (Device_B) 1 Chromecast Audio is connected to the router wirelessly (Device_C) Devices are not member of any group, neither CCBI4A Group nor OEM's Multi-room group • A PC is connected to the router via Ethernet • The devices are connected to a soundcard • The soundcard is connected to the PC • An audio recording software is installed on the PC • An Android/iOS device with the Google Home app, content app and partner app (if necessary) The Android/iOS device is connected to the router wirelessly

#	Step actions	Expected results
1	Create a group (Group_OEM) with the OEM proprietary Multi-room solution including both DUTs (Device_A and Device_B).	Group_OEM is created. No CCBI4A Group is created. All 3 devices (also those which are member of Group_OEM) are visible in the Google Home app and are available in the device picker of a content app as standalone devices. Group_OEM is neither visible in the Google Home app nor in the device picker of the content app.
2	Create a CCBI4A Group (Group_CCBI) including all 3 devices (2 DUTs which are in Group_OEM and the Chromecast Audio) additional to OEM group.	CCBI4A Group is created without any problems. CCBI4A Group is visible in the Google Home app and is available in the devices picker of the content app. All 3 devices are visible and available as standalone devices.
3	Remove devices from the CCBI4A Group and add devices to the CCBI4A Group randomly at least 3 times ensuring that each devices is added and removed at least once. Check group configuration.	Group configuration is according to issued commands, i.e. the group consists of expected devices. All devices are idle but part of expected

		groups.
4	Add potentially missing devices to the CCBI4A Group again so that all three devices are part of the group. Start recording in the recording software.	CCBI4A Group consists of 3 devices (2 DUTs and 1 Chromecast Audio). Recording is started.
5	Cast playback to the CCBI4A Group (Group_CCBI) in the last configuration of step 3.	Playback is started on all devices in the CCBI4A Group (Group_CCBI) without any distortions audible or visible in the recording software.
6	Stop the CCBI4A session.	CCBI4A session is stopped. Playback is stopped on all devices without any distortions audible or visible in the recording software.
7	Start playback on the OEM group (Group_OEM) using their own mechanism (Audio source is e.g. Aux, Bluetooth, …). Note: In OEM proprietary Multi-room solution there may be a need for creating a new OEM group.	Playback is started on all devices in the OEM group (Device_A and Device_B) without any distortions audible or visible in the recording software.
8	Cast playback to the CCBI4A Group (Group_CCBI).	Playback on the OEM group (Group_OEM) is stopped without any distortions audible or visible in the recording software. Playback is started on all devices in the CCBI4A Group (Group_CCBI) without any distortions audible or visible in the recording software.

3.2. Performance

Details: This test suite covers basic RF performance, quality of audio synchronization, coexistence of multiple grouped devices and proper playback (especially absence of dropouts).

GCERT-5: RF performance

Summary: This test case checks the RF performance of the DUT, checks for the absence of dropouts when the DUT is in different angular positions to the Wi-Fi signal emitted by reference antennas. For different family members the test case will be repeated depending on differences in Wi-Fi properties.

Preconditions:

- Two broadband reference antennas inside an RF shielded and anechoic room
  A Linksys WRT1200AC Dual-Band Smart Wi-Fi Wireless Router outside the room is connected to the Internet
  Broadband reference antennas connected to the wireless router via variable attenuator
  Attenuation: -30 dB
- 2 DUTs and 2 Chromecast Audio devices
  1 DUT is in the RF shielded and anechoic room on a rotation table at a distance of 3 meters from the antennas (Device_A)
  Starting position of DUT is with the front facing directly towards the antennas
  DUT (Device_A) is connected to the router wirelessly
  1 DUT outside the RF shielded and anechoic room is connected to the router via Ethernet (Device_B)
  2 Chromecast Audio devices outside the RF shielded and anechoic room are connected to the router via Ethernet (Device_C and Device_D)
- A PC outside the RF shielded and anechoic room is connected to the router via Ethernet
- The devices outside the RF shielded and anechoic room are connected to a soundcard outside the RF shielded and anechoic room
- The soundcard is connected to the PC
- An audio recording software is installed on the PC
- A media server with audio files is running on the PC
- An Android/iOS device with the Google Home app
  The Android/iOS device is connected to the router wirelessly

Please have a look at Test bed for RF performance test for a diagram and for instructions how to handle DUTs without obvious front or DUTs without Ethernet connection.

#	Step actions	Expected results
1	Create a CCBI4A Group with explicit leader/follower configuration: Leader: DUT in the RF shielded and anechoic room (Device_A) Followers: Device_B, Device_C, Device_D	CCBI4A Group is created and visible in the Google Home app. All 4 devices (2 DUTs and 2 Chromecast Audio devices) are visible in the Google Home app.

2	Start recording in the recording software.	Recording is started.
3	From media server cast playback to the group.	All devices are playing in sync without any distortions audible or visible in the recording software.
4	Keep the DUT (Device_A) in the position for one minute and get RSSI twice within this time.	All devices are playing in sync without any distortions audible or visible in the recording software.
5	Turn the DUT (Device_A) by 45 degrees.	All devices are playing in sync without any distortions audible or visible in the recording software.
6	Repeat steps 4 - 5 until starting position is reached again.	In every position all devices are playing in sync without any distortions audible or visible in the recording software, especially no dropouts occur. The average RSSI should be higher than -75 dB (absolute value < 75).

GCERT-6: Duration test

Summary: This test case checks the quality of playback during a long period of time.

Preconditions:

- The whole setup is located in an RF shielded room
- A wireless router is connected to the Internet
  Wireless Router: Netgear AC1750 Smart WiFi Router (Model: R6400)
- 3 DUTs and 1 Chromecast Audio
  1 DUT is connected to the router wirelessly in the 5 GHz band (Device_A)
  1 DUT is connected to the router wirelessly in the 2.4 GHz band (Device_B)
  1 DUT is connected to the router via Ethernet (Device_C)
  1 Chromecast Audio is connected to the router wirelessly in the 2.4 GHz band (Device_D)
- A PC is connected to the router via Ethernet
- The devices are connected to a soundcard
  Soundcard: M-Audio Delta 1010
- The soundcard is connected to the PC
- An audio recording software is installed on the PC
- A media server with special files for long playback is running on the PC
- An Android/iOS device with the Google Home app
  The Android/iOS device is connected to the router wirelessly

#	Step actions	Expected results
1	Create a CCBI4A Group with explicit leader/follower configuration: Leader: DUT connected wirelessly in the 5 GHz band (Device_A) Followers: Device_B, Device_C, Device_D	CCBI4A Group is created and visible in the Google Home app. All 4 devices (3 DUTs and 1 Chromecast Audio) are visible in the Google Home app.
2	Start recording in the recording software.	Recording is started.
3	From media server cast playback to the group (special files to play continuously without any dropouts for at least 10 hours).	Playback starts on all devices without any distortions audible or visible in the recording software.
4	Let it play for at least 10 hours.	Playback continues for the whole duration. No dropout is visible in the recording software.

GCERT-7: Audio output synchronization

Summary: This test case checks the synchronization accuracy and absence of dropouts during 3 hours playback in a clean environment.

Preconditions:

- The whole setup is located in an RF shielded room
- A wireless router is connected to the Internet
  Wireless Router: Netgear AC1750 Smart WiFi Router (Model: R6400)
- 3 DUTs and 1 Chromecast Audio
  1 DUT is connected to the router wirelessly in the 5 GHz band (Device_A)
  1 DUT is connected to the router wirelessly in the 2.4 GHz band (Device_B)
  1 DUT is connected to the router via Ethernet (Device_C)
  1 Chromecast Audio is connected to the router wirelessly in the 2.4 GHz band (Device_D)
- A PC is connected to the router via Ethernet
- The devices are connected to a soundcard
  Soundcard: M-Audio Delta 1010
- The soundcard is connected to the PC
- An audio recording software is installed on the PC
- A media server with special files for long playback is running on PC
- An Android/iOS device with the Google Home app
  The Android/iOS device is connected to the router wirelessly

#	Step actions	Expected results
1	Create a CCBI4A Group with explicit leader/follower configuration: Leader: DUT connected wirelessly in the 5 GHz band (Device_A)	CCBI4A Group is created and visible in the Google Home app. All 4 devices (3 DUTs and 1 Chromecast Audio) are visible

	Followers: Device_B, Device_C, Device_D	in the Google Home app.
2	Start recording in the recording software.	Recording is started.
3	From media server cast playback to the group (special files to play continuously without any dropouts for at least 3 hours).	Playback starts on all devices.
4	Let it play for at least 3 hours. If DUT supports different audio processing modes switch between all modes, i.e. equalizer, sound enhancements, etc., on both leader and follower.	Playback continues. All modes are properly calibrated and do not impact the synchronization.
5	Run the synchronization measurement tool to get synchronization between ● Device_A - Device_B (Leader and DUT connected wirelessly in the 2.4 GHz band), ● Device_A - Device_C (Leader and DUT connected via Ethernet) and ● Device_B - Device_D (DUT and Chromecast Audio both connected wirelessly in the 2.4 GHz band).	Tool yields results.
6	Check results.	No dropout occurred. Maximum synchronization accuracy is within ±5 ms, should be within ±1 ms.

GCERT-8: Capability to maintain 8 grouped devices via Ethernet

Summary: This test case checks the capability to maintain a group with up to 8 devices connected via Ethernet.
This test case is only required if the DUT supports Ethernet connection.

Preconditions:

- The whole setup is located in an RF shielded room
- A wireless router is connected to the Internet
  Wireless Router: Netgear AC1750 Smart WiFi Router (Model: R6400)
- OvisLink Live-FSH8R Switch to provide at least 8 Ethernet ports
- 3 DUTs and 5 Chromecast Audio devices
  All devices are connected to the router via Ethernet
  Devices are grouped: Verify that a DUT is group leader. Explicit leader/follower configuration may be needed
- A PC is connected to the router via Ethernet
- The devices are connected to a soundcard
  Soundcard: M-Audio Delta 1010
- The soundcard is connected to the PC
- An audio recording software is installed on the PC
- An Android/iOS device with the Google Home app and locally stored audio files
  The Android/iOS device is connected to the router wirelessly

#	Step actions	Expected results
1	Start recording in the recording software.	Recording is started.
2	Use Android mirroring to cast local stored music to the group. Set the volume to an adequate level, i.e. neither near to minimum nor to maximum.	Playback starts on all devices without any distortions audible or visible in the recording software.
3	Let it play for at least 60 seconds. Capture CPU load and memory load from the leader every 2 seconds.	All devices are playing in sync without any distortions audible or visible in the recording software. Neither CPU load nor memory load reaches its limit.
4	Issue following commands to the group: Pause, Play, Next, Previous, Mute, Un-mute, Change volume.	Respective action is applied to all devices in the group without any distortions audible or visible in the recording software. The latency between applying to the first device and to the last device is less than 200 ms.

GCERT-9: Capability to maintain 5 grouped devices connected wirelessly

Summary: This test case checks the capability to maintain a group with up to 5 devices connected wirelessly.

Preconditions:

- The whole setup is located in an RF shielded room
- A wireless router is connected to the Internet
  Wireless Router: Netgear AC1750 Smart WiFi Router (Model: R6400)
- 2 DUTs and 3 Chromecast Audio devices
  All devices are connected to the router wirelessly in the 2.4 GHz band
  Devices are grouped: Verify that a DUT is group leader. Explicit leader/follower configuration may be needed
- A PC is connected to the router via Ethernet
- The devices are connected to a soundcard
  Soundcard: M-Audio Delta 1010
- The soundcard is connected to the PC
- An audio recording software is installed on the PC
- An Android/iOS device with the Google Home app and locally stored audio files
  The Android/iOS device is connected to the router wirelessly

#	Step actions	Expected results

1	Start recording in the recording software.	Recording is started.
2	Use Android mirroring to cast local stored music to the group. Set the volume to an adequate level, i.e. neither near to minimum nor to maximum.	Playback starts on all devices without any distortions audible or visible in the recording software.
3	Let it play for at least 60 seconds. Capture CPU load and memory load from the leader every 2 seconds.	All devices are playing in sync without any distortions audible or visible in the recording software. Neither CPU load nor memory load reaches its limit.
4	Issue following commands to the group: Pause, Play, Next, Previous, Mute, Un-mute, Change volume.	Respective action is applied to all devices in the group without any distortions audible or visible in the recording software. The latency between applying to the first device and to the last device is less than 200 ms.

3.3. Source switching

Details: This test suite covers termination of a cast session in different situations.

GCERT-16: Switching input of the group leader

Summary: This test case checks correct cast termination behavior when the input source of the group leader is changed.

Preconditions:

- A wireless router is connected to the Internet
- 2 DUTs and 1 Chromecast Audio
  1 DUT is connected to the router via Ethernet (Device_A)
  1 DUT is connected to the router wirelessly (Device_B)
  1 Chromecast Audio is connected to the router wirelessly (Device_C)
  Devices are grouped: Verify that a DUT (Device_A) is group leader
- A PC is connected to the router via Ethernet
- The devices are connected to a soundcard
- The soundcard is connected to the PC
- An audio recording software is installed on the PC
- An Android/iOS device with the Google Home app, content app and partner app (if necessary)
  The Android/iOS device is connected to the router wirelessly

#	Step actions	Expected results
1	Start recording in the recording software.	Recording is started.
2	Cast playback to the CCBI4A Group.	All devices are playing in sync without any distortions audible or visible in the recording software.
3	Change the audio source of the group leader DUT (Device_A) to a different one than CCBI4A, e.g. AUX or Bluetooth.	Group playback is stopped without any distortions audible or visible in the recording software. Group leader DUT (Device_A) is playing from the selected source without any distortions audible or visible in the recording software.
4	Cast playback to CCBI4A Group.	Leader DUT's (Device_A) input source is switched back to CCBI4A. All devices are playing in sync without any distortions audible or visible in the recording software.

GCERT-30: Switching input of a group follower

Summary: This test case checks correct cast termination behavior when the input source of the follower DUT is changed.

Preconditions:

- A wireless router is connected to the Internet
- 2 DUTs and 1 Chromecast Audio
  1 DUT is connected to the router via Ethernet (Device_A)
  1 DUT is connected to the router wirelessly (Device_B)
  1 Chromecast Audio is connected to the router wirelessly (Device_C)
  Devices are grouped: Verify that a DUT (Device_A) is group leader
- A PC is connected to the router via Ethernet
- The devices are connected to a soundcard
- The soundcard is connected to the PC
- An audio recording software is installed on the PC
- An Android/iOS device with the Google Home app, content app and partner app (if necessary)
  The Android/iOS device is connected to the router wirelessly

#	Step actions	Expected results
1	Start recording in the recording software.	Recording is started.

2	Cast playback to the CCBI4A Group.	All devices are playing in sync without any distortions audible or visible in the recording software.
3	Change the audio source of the follower DUT (Device_B) to a different one than CCBI4A, e.g. AUX or Bluetooth.	Group playback is stopped without any distortions audible or visible in the recording software. Follower DUT (Device_B) is playing from the selected source without any distortions audible or visible in the recording software.
4	Cast playback to CCBI4A Group.	Follower DUT's (Device_B) input source is switched back to CCBI4A. All devices are playing in sync without any distortions audible or visible in the recording software.

3.4. User interaction

Details: This test suite covers control of playback and volume.

GCERT-17: Playback control

Summary: This test case checks the device behavior for user interaction during playback.

Preconditions:

- A wireless router is connected to the Internet
- 2 DUTs and 1 Chromecast Audio
  1 DUT is connected to the router via Ethernet (Device_A)
  1 DUT is connected to the router wirelessly (Device_B)
  1 Chromecast Audio is connected to the router wirelessly (Device_C)
  Devices are grouped: Verify that a DUT (Device_A) is group leader
- A PC is connected to the router via Ethernet
- The devices are connected to a soundcard
- The soundcard is connected to the PC
- An audio recording software is installed on the PC
- An Android/iOS device with the Google Home app and content app
  The Android/iOS device is connected to the router wirelessly

#	**Step actions**	**Expected results**

1	Start recording in the recording software.	Recording is started.
2	Cast playback to group.	All devices are playing in sync without any distortions audible or visible in the recording software.
3	Issue following commands to the group using the content app: Pause, Play, Next, Previous, Scrubbing a song.	Respective action is applied to the group without any distortions audible or visible in the recording software. Both DUTs (leader and follower DUT) provide correct metadata on the DUT's screen (if existing).
4	Issue Pause/Play command to the group from each device using a remote (if existing).	Respective action is applied to the group without any distortions audible or visible in the recording software. Both DUTs (leader and follower DUT) provide correct metadata on the DUT's screen (if existing).
5	Issue Pause/Play command to the group from each device using the device buttons (if existing).	Respective action is applied to the group without any distortions audible or visible in the recording software. Both DUTs (leader and follower DUT) provide correct metadata on the DUT's screen (if existing).

GCERT-18: Volume control

Summary: This test case covers basic volume related functionality.

Preconditions:

- A wireless router is connected to the Internet
- 2 DUTs and 1 Chromecast Audio
  1 DUT is connected to the router via Ethernet (Device_A)
  1 DUT is connected to the router wirelessly (Device_B)
  1 Chromecast Audio is connected to the router wirelessly (Device_C)
  Devices are grouped: Verify that a DUT (Device_A) is group leader
- A PC is connected to the router via Ethernet
- The devices are connected to a soundcard
- The soundcard is connected to the PC
- An audio recording software is installed on the PC
- Executable multizone_cli

- An Android/iOS device with the Google Home app and content app
  The Android/iOS device is connected to the router wirelessly

#	Step actions	Expected results
1	Start recording in the recording software.	Recording is started.
2	Cast playback to the group and set the volume to an adequate level, i.e. neither near to minimum nor to maximum.	All devices are playing in sync without any distortions audible or visible in the recording software.
3	Mute group using the multizone_cli.	Group is muted without any distortions audible or visible in the recording software. All devices are silent.
4	Un-mute group using the multizone_cli.	Group is un-muted without any distortions audible or visible in the recording software.
5	Mute a single device using the multizone_cli.	Respective device is muted without any distortions audible or visible in the recording software. The volume level of the other devices is not changed.
6	Un-mute single device by increasing the volume level using the multizone_cli.	Respective device is un-muted without any distortions audible or visible in the recording software. The volume level of the other devices is not changed.
7	Increase/decrease the group volume level using the multizone_cli.	Group volume level is increased/decreased without any distortions audible or visible in the recording software. The volume level of each member device is increased/decreased without any distortions audible or visible in the recording software.
8	Increase/decrease the volume level of a single device using the multizone_cli.	The volume level of respective device is increased/decreased without any distortions audible or visible in the recording

		software. The volume level of the other devices is not changed. The group volume level is increased/decreasedwithout any distortions audible or visible in the recording software.

GCERT-19: Increase group volume level below 1.0

Summary: This test case checks if the group volume level and the individual volume levels are calculated correctly if volume is increased so that none of the member volume levels is over 1.0.
Preconditions: • A wireless router is connected to the Internet • 2 DUTs and 1 Chromecast Audio 1 DUT is connected to the router via Ethernet (Device_A) 1 DUT is connected to the router wirelessly (Device_B) 1 Chromecast Audio is connected to the router wirelessly (Device_C) Devices are grouped: Verify that a DUT (Device_A) is group leader • A PC is connected to the router via Ethernet • Executable multizone_cli • An Android/iOS device with the Google Home app and content app The Android/iOS device is connected to the router wirelessly

#	Step actions	Expected results
1	Cast playback to the group.	All devices are playing in sync.
2	Set the individual member volume levels to the following values: Device_A: 0.2 Device_B: 0.3 Device_C: 0.8	Each member volume level corresponds to the new value. The group volume level is average, i.e. 0.433.
3	Increase the group volume level by 0.1 changing it to 0.533.	The individual member volume levels are all increased by fixed value (+0.1), i.e.: Device_A: 0.3 Device_B: 0.4 Device_C: 0.9 The group volume is average, i.e. 0.533.

GCERT-20: Increase group volume level above 1.0

Summary: This test case checks if the group volume level and the individual volume levels are

calculated correctly if volume is increased so that two of the member volume levels are over 1.0.
Preconditions: • A wireless router is connected to the Internet • 2 DUTs and 1 Chromecast Audio 1 DUT is connected to the router via Ethernet (Device_A) 1 DUT is connected to the router wirelessly (Device_B) 1 Chromecast Audio is connected to the router wirelessly (Device_C) Devices are grouped: Verify that a DUT (Device_A) is group leader • A PC is connected to the router via Ethernet • Executable multizone_cli • An Android/iOS device with the Google Home app and content app The Android/iOS device is connected to the router wirelessly

#	Step actions	Expected results
1	Cast playback to the group.	All devices are playing in sync.
2	Set the individual member volume levels to the following levels: Device_A: 1.0 Device_B: 0.0 Device_C: 1.0	Each member volume level corresponds to the new value. The group volume level is average, i.e. 0.667.
3	Increase the group volume level in 4 steps, from 0.667 over 0.75, 0.83 and 0.92 to 1.0.	The individual member volume levels are increased. Two devices exceed the 1.0 limit and are capped. The individual member volume levels are: Device_A: 1.0 Device_B: 0.333 Device_C: 1.0 The group volume is 1.0.

3.5. Power management

Details: This test suite covers tests in different power modes and is only required if DUT supports different modes.

GCERT-22: Wake on cast

Summary: This test case checks if DUT wakes in all power modes when starting a cast session.

Preconditions: • A wireless router is connected to the Internet • 2 DUTs and 1 Chromecast Audio 1 DUT is connected to the router via Ethernet (Device_A) 1 DUT is connected to the router wirelessly (Device_B) 1 Chromecast Audio is connected to the router wirelessly (Device_C) Devices are grouped: Verify that a DUT (Device_A) is group leader • A PC is connected to the router via Ethernet • The devices are connected to a soundcard • The soundcard is connected to the PC • An audio recording software is installed on the PC • An Android/iOS device with the Google Home app, content app and partner app (if necessary) The Android/iOS device is connected to the router wirelessly

#	Step actions	Expected results
1	Request the leader DUT (Device_A) to enter power save mode.	Leader DUT (Device_A) is in power save mode.
2	Open a content app and tap the cast button.	CCBI4A Group is available in the device picker. All devices (also leader DUT in power save mode) are available in the device picker as standalone devices.
3	Start recording in the recording software.	Recording is started.
4	Cast playback to the group.	Leader DUT (Device_A) exits power save mode. Cast session is started. All devices are playing in sync without any distortions audible or visible in the recording software.
5	Repeat steps 1-4 in all available power save modes.	Same expected results for respective steps.

GCERT-31: Enter power save mode while no cast session is started

Summary: This test case checks correct power save mode behavior when when no cast session is started, especially if device maintains reconnection logic after getting disconnected from network.
Preconditions: • A wireless router is connected to the Internet • 2 DUTs and 1 Chromecast Audio 1 DUT is connected to the router via Ethernet (Device_A) 1 DUT is connected to the router wirelessly (Device_B)

1 Chromecast Audio is connected to the router via Ethernet (Device_C)
Devices are grouped: Verify that a DUT (Device_A) is group leader

- DUT connected via Ethernet (Device_A) has no credentials for any wireless network
- A PC is connected to the router via Ethernet
- The devices are connected to a soundcard
- The soundcard is connected to the PC
- An audio recording software is installed on the PC
- An Android/iOS device with the Google Home app, content app and partner app (if necessary)
  The Android/iOS device is connected to the router wirelessly
- Latest Chrome browser (with "Cast…" command)

#	**Step actions**	**Expected results**
1	If the DUTs do not support any automatic power save mode, skip this step. If the DUTs support an automatic power save mode, e.g. enters a power save mode after a certain time, wait for at least this required time. Open a content app and tap the cast button.	CCBI4A Group is available in the device picker. All devices are available in the device picker as standalone devices. DUTs shall not enter any automatic power save mode that causes the device to become un-discoverable for casting.
2	If step 1 was executed request DUTs which are in power save mode to leave the power save mode. Explicitly request both DUTs (Device_A and Device_B) to enter power save mode. Disconnect Device_A by pulling its Ethernet cable. Disconnect Device_B by turning off Wi-Fi on the router.	Both DUTs are in power save mode, i.e. displays or LEDs may be off. Both DUTs are disconnected from network.
3	In the browser on the PC click the cast icon.	CCBI4A Group is available in the device picker. Chromecast Audio is available as standalone device. DUTs may not be available in the device picker.
4	Turn on Wi-Fi on the router. Reconnect Device_A by plugging in its Ethernet cable.	Both DUTs are reconnected to the network and are available in the device picker.
5	Cast playback to the group.	All devices are playing in sync without any distortions audible or visible in the recording

		software.

GCERT-21: Enter power save mode during cast session

Summary: This test case checks correct behavior when device enters power save mode during an active cast session.
Preconditions: • A wireless router is connected to the Internet • 2 DUTs and 1 Chromecast Audio 1 DUT is connected to the router via Ethernet (Device_A) 1 DUT is connected to the router wirelessly (Device_B) 1 Chromecast Audio is connected to the router wirelessly (Device_C) Devices are grouped: Verify that a DUT (Device_A) is group leader • A PC is connected to the router via Ethernet • The devices are connected to a soundcard • The soundcard is connected to the PC • An audio recording software is installed on the PC • An Android/iOS device with the Google Home app, content app and partner app (if necessary) The Android/iOS device is connected to the router wirelessly

#	**Step actions**	**Expected results**
1	Start recording in the recording software.	Recording is started.
2	Cast playback to the group.	All devices are playing in sync without any distortions audible or visible in the recording software.
3	Explicitly request the follower DUT (Device_B) to enter power save mode.	Cast session is stopped. All devices stop playback without any distortions audible or visible in the recording software.

GCERT-23: Enter battery mode during cast session

Summary: This test case checks correct behavior when DUT is suddenly reliant on battery power during playback.
Preconditions: • A wireless router is connected to the Internet • 2 DUTs and 1 Chromecast Audio 1 DUT is connected to the router via Ethernet (Device_A) 1 DUT is connected to the router wirelessly (Device_B) 1 Chromecast Audio is connected to the router wirelessly (Device_C) Devices are grouped: Verify that a DUT (Device_A) is group leader

- Follower DUT (Device_B) is connected to the grid but is battery-powered too
- A PC is connected to the router via Ethernet
- The devices are connected to a soundcard
- The soundcard is connected to the PC
- An audio recording software is installed on the PC
- An Android/iOS device with the Google Home app and content app
  The Android/iOS device is connected to the router wirelessly

#	Step actions	Expected results
1	Start recording in the recording software.	Recording is started.
2	Cast playback to group.	All devices are playing in sync without any distortions audible or visible in the recording software.
3	Unplug the power cord of the follower DUT (Device_B).	Follower DUT (Device_B) uses battery as alternative power supply. Playback continues without any distortions audible or visible in the recording software.

GCERT-24: Disabled network interfaces

Summary: This test case checks behavior when network interfaces are disabled by entering power save mode while DUT is using the battery as power source.
This test case is only required if the DUT disables its network interfaces.

Preconditions:

- A wireless router is connected to the Internet
- 2 DUTs and 1 Chromecast Audio
  1 DUT is connected to the router via Ethernet (Device_A)
  1 DUT is connected to the router wirelessly (Device_B)
  1 Chromecast Audio is connected to the router wirelessly (Device_C)
  Devices are grouped: Verify that a DUT (Device_A) is group leader
- DUTs are disconnected from the grid and only using battery as power source
- A PC is connected to the router via Ethernet
- The devices are connected to a soundcard
- The soundcard is connected to the PC
- An audio recording software is installed on the PC
- An Android/iOS device with the Google Home app, content app and partner app (if necessary)
  The Android/iOS device is connected to the router wirelessly

#	Step actions	Expected results

1	Request both DUTs to enter power save mode.	Both DUTs enter power save mode and disable their network interfaces.
2	Open a content app and tap the cast button.	Group is visible in the device picker. Chromecast Audio is visible as standalone device. DUTs are not visible in the device picker.
3	Plug in the power cord of Device_A to enable its network interfaces and return to Wake on Cast mode (may still be in power save mode). Explicitly request Device_B to exit power save mode. Check device picker of the content app.	Group is visible in the device picker. Chromecast Audio and both DUTs are visible in the device picker. DUTs may not be able to reconnect to the configured network, but they shall be visible at least in the Google Home app.
4	Start recording in the recording software.	Recording is started.
5	Cast playback to the group.	If it has not before, Device_A exits power save mode. Playback is started on all devices without any distortions audible or visible in the recording software.

4.Manual configuration of Multi-room

*4.1.*Explicit leader/follower configuration

For testing purposes group leader and followers can be manually configured.
Mostly it makes sense to set only the group leader manually and add the follower devices in the Google Home app. That ensures that, in case of missing (selected) leader (e.g. in GCERT-31 Enter power save mode while no cast session is started) another member will be automatically elected as group leader. Otherwise the other members are forced to be followers, hence there is no electable group leader and the group is not available for casting.

Leader setup

```
curl -v -H 'Content-Type: application/json' -d '{"uuid":"test-uuid",
"name":"test-group", "leader":"self"}' \
  http://<leader IP>:8008/setup/multizone/join_group
```

Follower setup

```
curl -v -H 'Content-Type: application/json' -d '{"uuid":"test-uuid",
"name":"test-group", "leader":"<leader IP>"}' \
  http://<follower IP>:8008/setup/multizone/join_group
```

Disband a group

Disbanding a group removes it permanently; the disbanded UUID is no longer usable. You should send the disband command to all online devices; it will be automatically propagated to devices that were offline when the command was sent out. It is an error to try to create/join a group with a disbanded UUID.

```
curl -v -H 'Content-Type: application/json' -d '{"uuid":"test-uuid"}' \
 http://<device IP>:8008/setup/multizone/disband_group
```

*4.2.*Get information about automatically elected leader and group port

Package needed: `sudo apt-get install avahi-utils`
Command: `avahi-browse -rt _googlecast._tcp`

Read Multi-room configuration

The Multi-room configuration can be read from eureka_info:

```
curl http://<device IP>:8008/setup/eureka_info?params=multizone
```

*4.3.*Volume control through multizone_cli

The multizone_cli (multizone_client) allows to set and get specific volume levels. Following commands are needed.

Set the volume level of a group member:

`set_member_volume <group_uuid> <device_ip> <level>`

Set the volume level of a group:
`set_group_volume <group_uuid> <level>`

Mute the volume of a device:
`mute_device <device_ip>`

Un-mute the volume of a device:
`unmute_device <device_ip>`

Mute the volume of a group:
`mute_group <group_uuid>`

Un-mute the volume of a device:
`unmute_group <group_uuid>`

Get the volume of all members in a group:
`get_member_volumes <group_uuid>`

Get the volume level and mute state of a group:
`get_group_volume <group_uuid>`